REVISIONS						
ZONE	LTR	DESCRIPTION	CHANGE No	DATE	BY	APPR'D
	A	RELEASED FOR QUOTE	DR27622	22JUL10	SLK	JRR

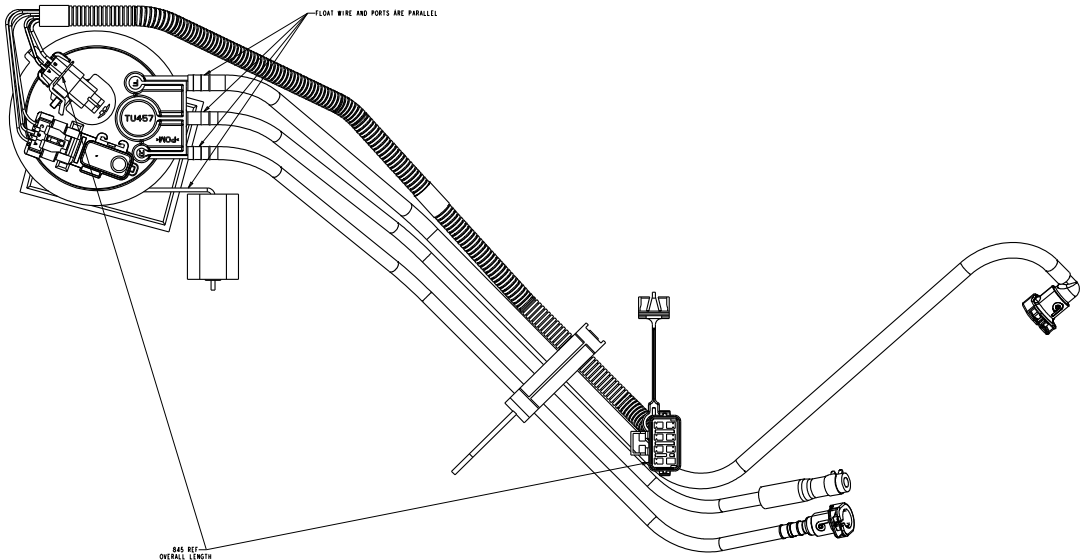

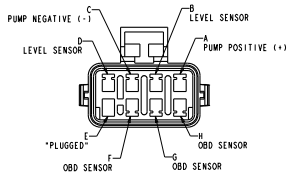

VIEW X
E-CONNECTOR
PINOUTS
SCALE 2:1

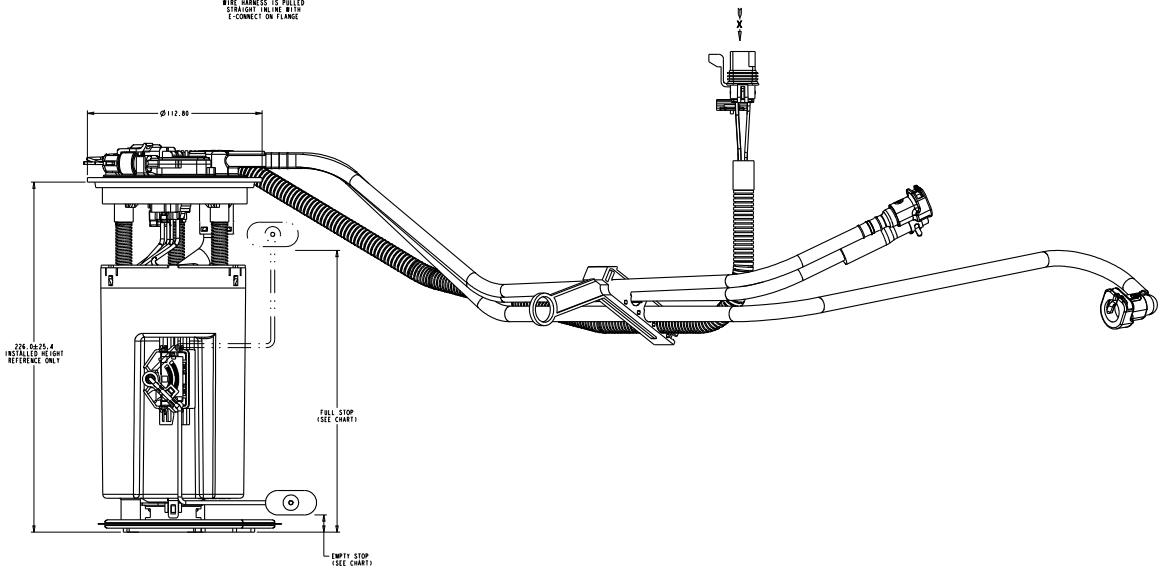

LEVEL SENDER		
POINT	HEIGHT (mm)	RESISTANCE (OHMS)
FULL STOP	(180.9)	90 ± 3
EMPTY STOP	(10)	2 ± 1

NOTES:

1. CHANGE IN DESIGN, COMPOSITION, LOCATION OR PROCESSING FROM THE PART PREVIOUSLY APPROVED FOR PRODUCTION REQUIRES PRIOR APPROVAL BY TI AUTOMOTIVE
2. REPLACES: GM# 25161064
   25179749
   25330970
   19179626

   ACR MUB
   MU126
   MU269
   MU179
3. PUMP USED: F20001164
4. MODULE TO BE PACKAGED USING COMPONENTS NOTED ON BOM SO THAT CONTAMINATION FROM FOREIGN MATERIAL IS PREVENTED:
   - PLUG PROTECTORS ON PORTS
   - POLYBAG

METRIC
ALL DIMENSIONS ARE IN MILLIMETERS

DO NOT SCALE
DECIMAL TOLERANCES UNLESS OTHERWISE SPECIFIED
ONE PLACE ±0.25 TWO PLACE ±0.13 ANGLES ±1°

THIRD ANGLE PROJECTION

DIMENSIONS IN ACCORDANCE WITH ASME Y14.5 - 2009

TI Automotive
630 COLUMBIA ST.
CARO, MI 48723
+1 989.673.7727

ENGINEER	J.ROSENTANGEL	22JUL10	MATERIAL/SPECIFICATION:
DES.MANAGER	S.KADY	22JUL10	
DESIGNER	S.KADY	22JUL10	
CAD SYSTEM: PRO/E	SCALE: 1:1		SHEET NO. 1 OF 1
REFERENCE DRAWING: CAD: AR0028194/AA			PART REFERENCE(S): 000102466/AA
REFERENCE DRAWING:			PART REFERENCE(S):

THIS DRAWING IS THE PROPERTY OF TI AUTOMOTIVE. THE INFORMATION CONTAINED HEREIN IS TO BE KEPT CONFIDENTIAL AND NOT DISCLOSED TO ANY OTHER PERSON OR ENTITY WITHOUT THE PRIOR WRITTEN CONSENT OF TI AUTOMOTIVE. THIS DRAWING IS TO BE RETURNED TO TI AUTOMOTIVE UPON REQUEST. THIS DRAWING IS TO BE USED ONLY FOR THE PURPOSE FOR WHICH IT WAS PROVIDED. THIS DRAWING IS TO BE USED ONLY IN CONNECTION WITH THE PRODUCTION OF PARTS FOR TI AUTOMOTIVE. THIS DRAWING IS TO BE USED ONLY IN ACCORDANCE WITH ALL APPLICABLE INTELLECTUAL PROPERTY RIGHTS, INCLUDING, BUT NOT LIMITED TO, PATENTS, TRADEMARKS, OR COPYRIGHTS. © 2009 TI AUTOMOTIVE. ALL RIGHTS RESERVED.

DRAWING TITLE: TOP LEVEL ASM/GM SMALL CAR,F PLAN

SIZE: A0 DRAWING NO./REV.: TU457 / REV A